APPROVED: _____

DATE: _____ TITLE: _____

Rev	AWO #	Description	Date	Appr
-		RELEASED	5/23/05	
A		ADDED CIRCUIT #1 NOTE	12/29/08	BAS
B	9434	REDRAWN	3/26/09	
C		REVISED DIM.	09/21/12	
D		UPDATE DRAWING	8/23/16	AY/MY

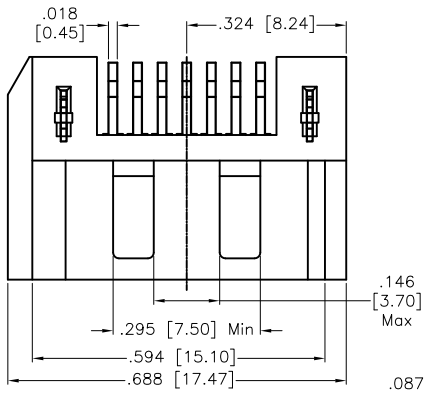

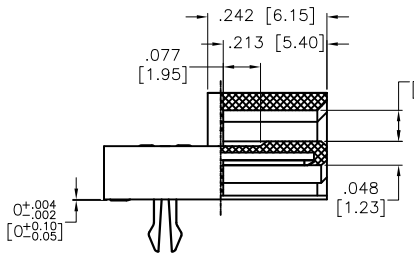

SECTION A–A

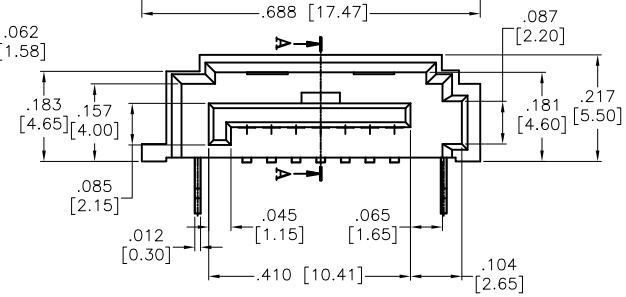

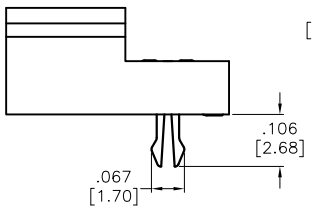

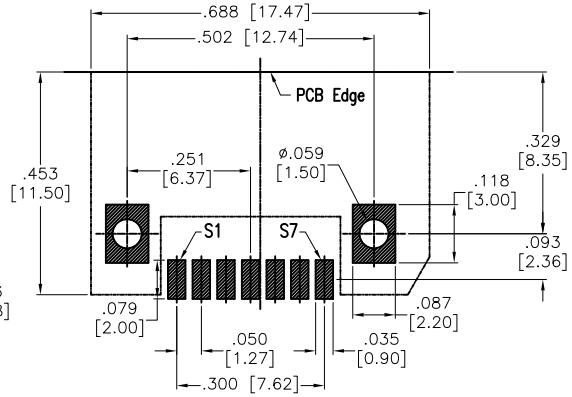

RECOMMENDED P.C.B LAYOUT

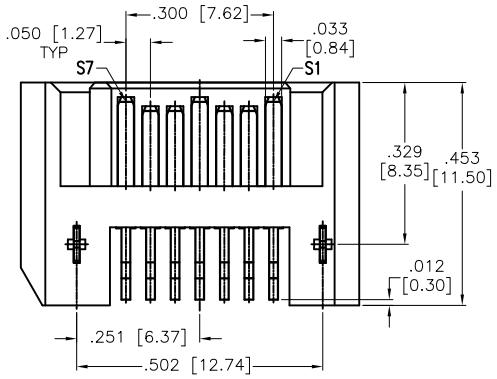

Pin	SIGNAL NAME
S1	GND
S2	A+
S3	A–
S4	GND
S5	B–
S6	B+
S7	GND

SPECIFICATIONS:

Material:

Insulator: Hi–Temp Thermoplastic, rated UL 94V–0

Insulator color: Black

Contacts: Phosphor Bronze

Harpoon: Brass, Tin plated

Plating:

Gold flash over Nickel underplate on contact area,

Tin over Nickel underplate on tails

Electrical:

Current rating: 1.5 Amps max per contact

Contact resistance: 30 mohms max

Insulation resistance: 1000 Mohms min

Dielectric withstanding voltage: 500 VAC for 1 minute

Temperature Rating:

Operating temperature: –55°C to +85°C

Environmental:

Lead free, RoHS compliant.

RoHS COMPLIANT

UNLESS OTHERWISE SPECIFIED
ALL DIMENSIONS ARE INCHES [MM]
TOLERANCES: EXCEPT AS NOTED

INCHES		HOLES	
.X	± .10	Ø.X	±.10
.XX	± .020	Ø.XX	±.015
.XXX	± .015	Ø.XXX	±.010

APPROVALS		DATE
DRAWN	SS	5/23/05
CHECKED		
APPROVED		

ADAM TECH

909 Rahway Avenue, Union, NJ 07083

Phone: 908-687-5000 Fax: 908-687-5710

TITLE: SATA CONNECTOR, 7P, TYPE A LEFT POLARIZATION, SMT, W/ KEY

SIZE	PART NO.	REV.
X	SATA-A-PL-SMT-K	D

REF: S00078T | SCALE: NTS | SHEET 1 OF 1

Downloaded from Arrow.com.