LEAD FREE VERSION	MARKING
7432E0525S01LF	YES

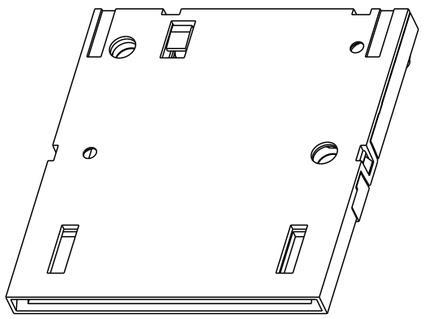

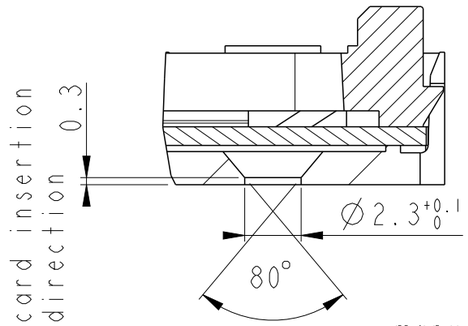

SECTION X-X
SCALE 4:1

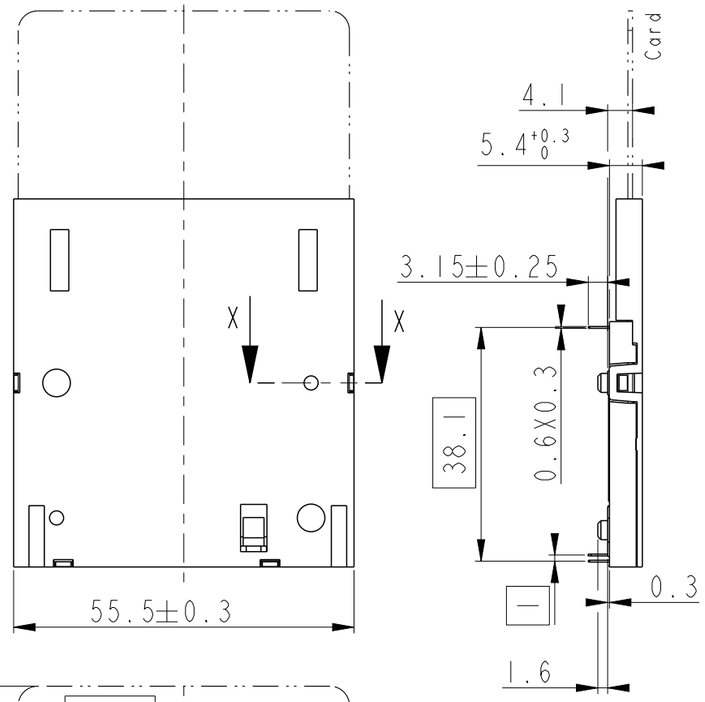

Recommended PCB Layout
(Component side)

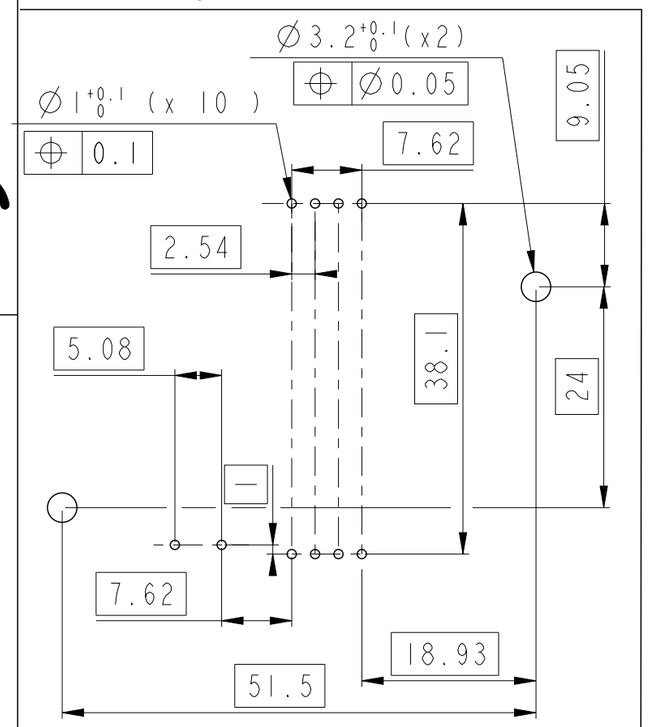

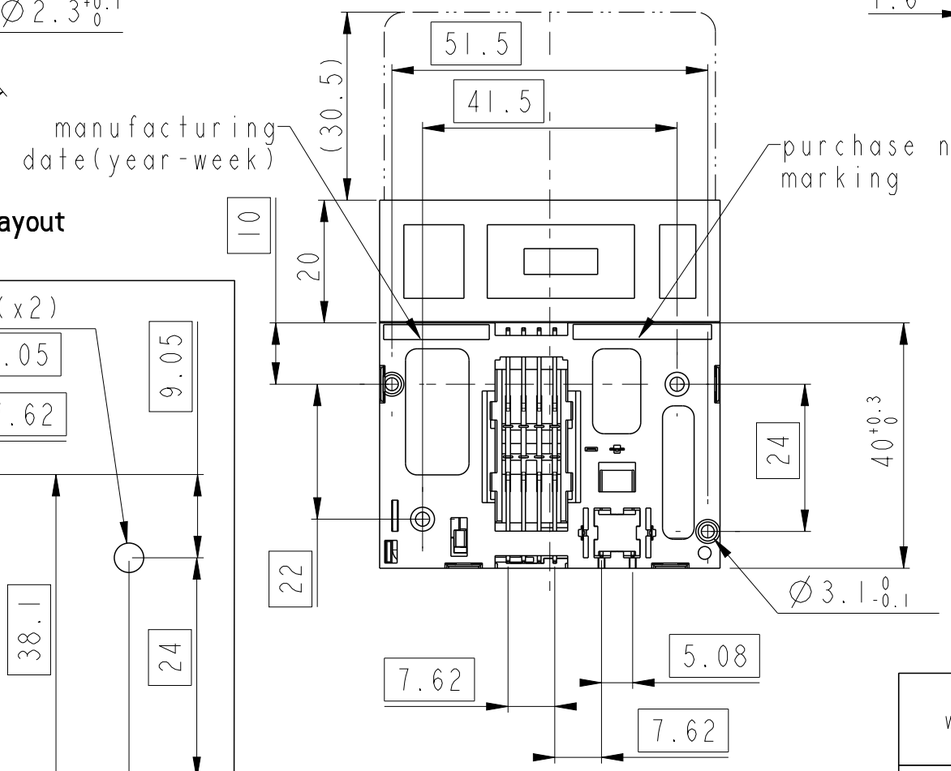

GENERAL :
High cycle life duration smart card connector with landing type contacts mechanism.The landing type connector also provides the feature of recessed contacts when card is not inserted which protects them against vandalism.
Smart card connector is in accordance with ISO 7816-2.
Smart card for reference purposes only.

ELECTRICAL PROPERTIES:
Insulation resistance : > 1000MΩ
Dielectric withstanding voltage : >750 Vrms
Curent carrying capacity : Min 10µA, Max 1A
Contact resistance : < 100mΩ

MECHANICAL PROPERTIES :
Operating force : Insertion : F < 10N
Withdrawal : 1 < F< 6.5N
Contact Normal force : 0.2 < F< 0.3 for 0.6mm of deflection
Durability : 200 000 mating cycles

MATERIAL :
Head reader :High temp. thermoplastic, Colour Grey, Rated UL94V0
Cover : Thermoplastic, Rated UL94V0
Contacts : Copper alloy,
Plating : Gold over Nickel or Equivalent on contact area
SnPb(60/40) over Nickel on solder tails(FOR LEADED VERSION)
Matte Tin min. on solder tails(FOR LEAD FREE VERSION)

ENVIRONMENT :
Operating temperature : -40°C / +85°C
Climatic conditions : UTE 93-421

PACKAGING :
Plastic cavity tray

LEAD FREE VERSION:

"This product meets European Union Directives and other country regulations as described in GS-22-008"

The housing will withstand exposure to 260°C peak temperature for 3-5seconds in a wave solder application with a 1.6mm minimum thick circuit board.

rev	ecn no	dr	date
H	109-0192	RPK	2009/09/17
C	LS3088	JTA	2003/11/28
D	105-0176	NT	2005/09/30
E	106-0078	DTK	2006/06/19
F	108-0136	SSC	2008/10/10
G	108-0166	SSC	2008/12/13

General Tolerances	
0 to 10mm:	±0.1mm
10 to 30mm:	±0.15mm
30 to 60mm:	±0.2mm
60 and more:	±0.3mm

www.fciconnect.com

surface -- ISO 1302 | tolerance std ISO 406 ISO 1101 | projection | mm

TOLERANCES UNLESS OTHERWISE SPECIFIED

Dr	J.TARON	2002/04/29	ANGULAR	LINEAR	0.X	±
Eng	LE GALLIC	2002/04/29			0.XX	±
Chr	S.S.CHERIAN	2008/12/13	0°	±°	0.XXX	±
Appr	S.S.CHERIAN	2008/12/13	Product family		MOBILE I/O	

size A3 | Scale 1:1 | ECN 109-0192 | Spec ref --

title: E05 CONNECTOR WITH PEG
SMART CARD READER

dwg no: VJW54006 | Rev. H

catalog no: See Table | CUSTOMER | sheet 1 of 1

REV F - 2006-04-17

Copyright FCI.

Downloaded from Arrow.com.