Downloaded from Arrow.com.

REVISIONS					
REV	ECO	DESCRIPTION	DATE	BY	APPR
A1	-	RELEASE	30MAR2017	JAH	-

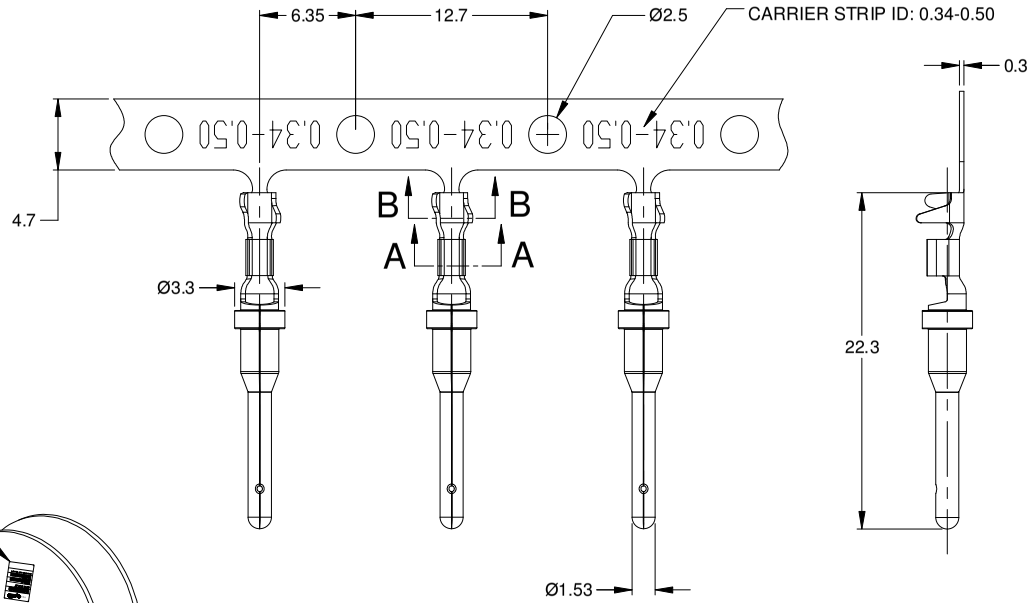

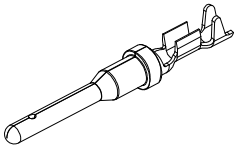

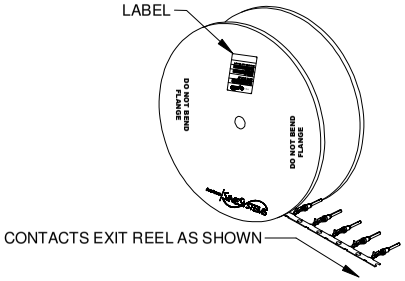

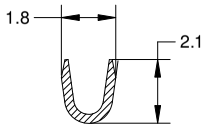

SECTION A-A

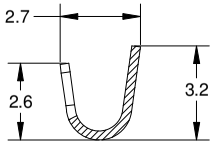

SECTION B-B

NOTES: UNLESS OTHERWISE SPECIFIED

1. MATERIAL: COPPER ALLOY
2. PLATING: SEE PART NUMBER CHART
3. CONTACT SIZE: 16
4. SPECIFICATIONS:
   4.1 CURRENT RATING: 13 AMPS
   4.2 CONTACT MILLIVOLT DROP: 100 MILLIVOLT DROP @ 13 AMP TEST CURRENT.
   4.3 RoHS COMPLIANT
5. RECOMMENDED WIRE RANGE: 20 - 22 AWG
6. ALL DIMENSIONS ARE FOR REFERENCE USE ONLY

PART NUMBER CHART	
PLATING	PART NUMBERS
NICKEL	AT60-16-0822
GOLD	AT60-16-0844

QUANTITY	PART NUMBER	DESCRIPTION	ITEM
	SEE CHART		

MATERIALS LIST

UNLESS OTHERWISE SPECIFIED
1) All dimensions are in metric(mm).
2) Tolerances are as follows:
1 PL DEC ±0.30 | Fractions ±1/64
2 PL DEC ±0.15 | Angles ±1°
3 PL DEC ±0.08
3) Note reference = X

MATERIAL SPECIFICATIONS:

PROCESS SPECIFICATIONS:

NEXT ASSY:

SIGNATURES		DATE
DRAWN:	J. HEAD	30MAR2017
CHECKED:		
ENGINEER:		
APPROVAL:		
CUSTOMER:		

THIS DRAWING IS SUPPLIED FOR INFORMATION ONLY. DESIGN FEATURES, SPECIFICATIONS AND PERFORMANCE DATA SHOWN HEREON ARE THE PROPERTY OF THE AMPHENOL CORPORATION. NO RIGHTS OF REPRODUCTION ARE IMPLIED. ALL DIMENSIONS ARE SUBJECT TO NORMAL MANUFACTURING VARIATIONS.

Amphenol

Sine Systems - www.amphenol-sine.com
44724 Morley Drive
Clinton Township, MI 48036

CONTACT, PIN, STAMPED, SIZE 16, 20-22 AWG, AT & AHD-9 SERIES

SIZE	TYPE	DWG NO:	REVISION
B	C-	AT60-16-08XX	A1

SCALE: NONE | SHEET 1 OF 1

TITLE: PIN, STAMPED, SIZE 16, 20-22 AWG, AT & AHD-9 SERIES
DWG NO: AT60-16-08XX
REV: A1
SH: 1
OF: 1