Downloaded from Arrow.com.

3M™ INDUSTRIAL RJ45 MODULAR PLUG

FOR ENHANCED CATEGORY 5 CABLE, MODULAR, IDC, WIREMOUNT

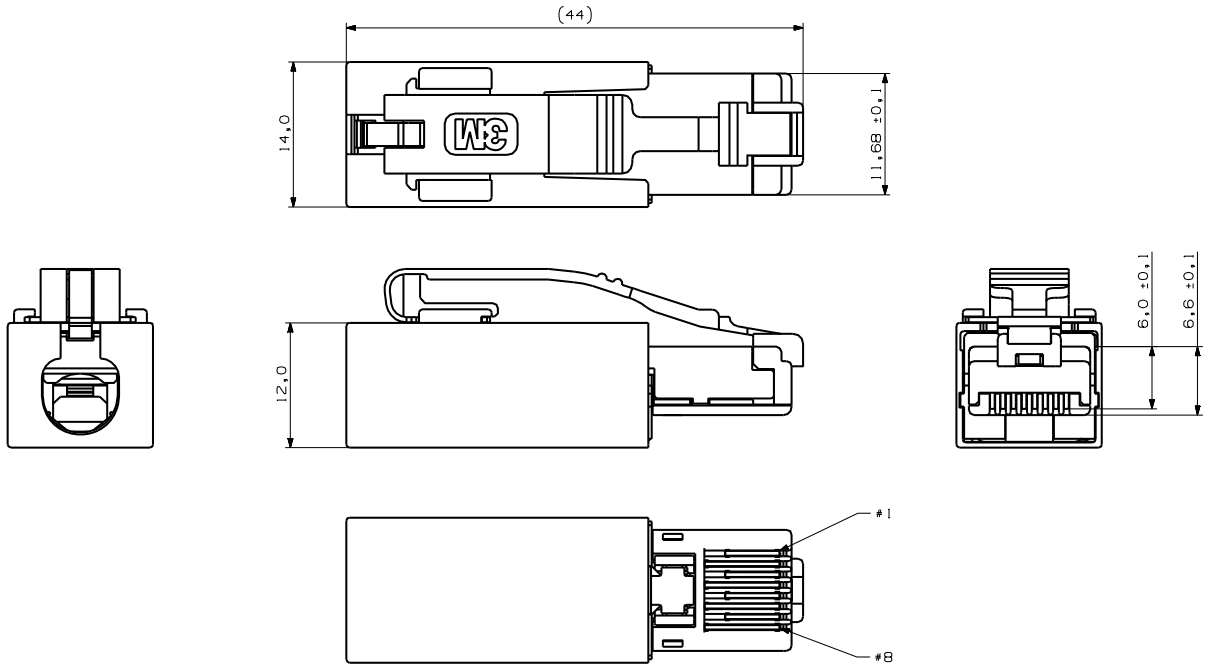

PERFORMANCE

1)MECHANICAL
INSERTION FORCE:20N MAX.

WITHDRAWL FORCE:20N MAX.
(EXCLUDE LATCH MECHANISM)

LATCH RETENTION FORCE:49N MIN.

2)ELECTRICAL
CURRENT RATING:0.5A

VOLTAGE RATING:24V

WITHSTANDING VOLTAGE:100VACrms

INSULATION RESISTANCE:5x10⁸ OHMS at 100VDC

RETURN LOSS:
TO MEET ENHANCED CATEGORY5 REQUIREMENT
(EIA/TIA-568 B.2 CAT5)

NEAR END CROSS TALK:
TO MEET ENHANCED CATEGORY5 REQUIREMENT
(EIA/TIA-568 B.2 CAT5)

SHIELD RESISTANCE:
100 MILLI OHM AT INITIAIL CONDITION

CONTACT RESISTANCE:
100 MILLI OHM AT INITIAIL CONDITION
DELTA R 25 MILLI OHM MAX. AFTER
EVALUATION TEST BASED ON 78-5102-0130-0

NOTE
THE HIGH FREQ.ELECTRICAL PERFORMANCE
OF CABLES DIFFERS ACCORDING TO FACTORS
SUCH AS CABLE STRUCTURE,CABLE LENGTH,
AND INSTALLATION LAYOUT.
THEN TO CHECK THE HIGH FREQ. ELECTRICAL
PERFORMANCE OF THE CABLE ASSEMBLY
BEFORE INSTALLATION IS RECOMMENDED.

3)ENVIRONMENTAL
TEMPERATURE RATING:-40℃ TO 70℃

NOTE
FOR LOW TEMPERATURE LIMIT:
EXCLUDING CABLE PERFORMANCE,NO DEW CONDITION
FOR HIGH TEMPERATURE LIMIT:
INCLUDING TEMPERATURE RAISING BY CURRENT

NOTES

1 MATERIAL:
BODY:GLASS REINFROCED
THERMOPLASTIC,UL 94V0
CASE,COVER AND LATCH
THERMOPLASTIC,UL 94V0

CONTACT:COPPER ALLOY

2 PLATING
UNDER NICKEL PLATING
CONTACT AREA:1.27um GOLD MIN.
TERMINAL AREA:Sn PLATING

3 MATED WITH INDUSTRIAL RJ45
MODULAR JACK CONNECTOR

4 COMPATIBLE CABLE:
ENHANCED CATEGORY 5 CABLE
AS FOLLOWS

1)WIRE
AWG 24 SOLID
AWG 24 STRANDED (7WIRES)
AWG 26 STRANDED (7WIRES)

2)CABLE GROUNDING
BRAIDED SHILED
OR DRAIN WIRES

3)CABLE OUTER DIAMETER
6.8mm MAX.

5 RoHS COMPLIANT.
SEE THE REGULATORY
INFORMATION APPENDIX (RIA)
IN THE "RoHS COMPLIANCE"
SECTION OF
WWW.3MCONNECTORS.COM FOR
COMPLIANCE INFORMATION
(RIA E1 & C1 APPLY).

6 FOR PRODUCT SPECIFICATIONS
AND WARRANTY INFORMATION
SEE 3M 78-5102-0130-0

7 IN THE EVENT OF CONFLICT
BETWEEN THIS DATA AND
THAT CONTAINED IN THE
PRODUCT SPECIFICATION,
THE PRODUCT SPECIFICATION
TAKES PRECEDENT.

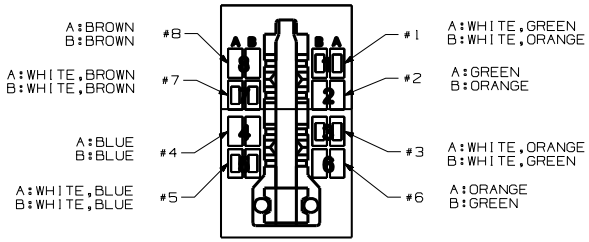

SIGNAL WIRING GUIDE
ON SEAL (T568A/T568B)

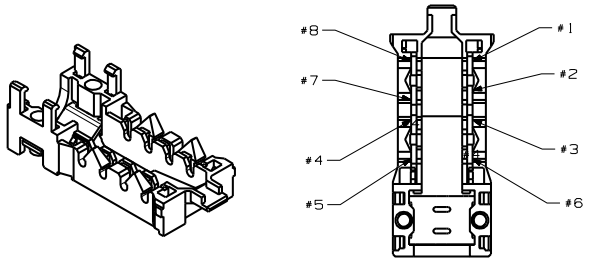

SIGNAL WIRING LAYOUT INFORMATION
OF COVER MODULES

ORDERING INFORMATION RJ45 MODULAR PLUG

3R1 08-0000-000 CE

PRODUCTION SERIES:
3R1: INDUSTRIAL RJ45
MODULAR PLUG

CONTACT QUANTITY:
08: 8 PIN

PLATING SUFFIX
CE: UNDER Ni PLATING
CONTACT AREA: 1.27μM GOLD MIN.
TERMINAL AREA: Sn

3M™ ELECTRONIC SOLUTIONS DIVISION
INTERCONNECT SOLUTIONS
VISIT http://www.3mconnectors.com

3M IS A TRADEMARK OF 3M COMPANY.
FOR TECHNICAL, SALES OR ORDERING INFORMATION
CALL YOUR LOCAL SALES REPRESENTATIVE

REV	ECO	ISSUE DATE AND DESCRIPTION	DRFT	CHKD
A	39561	MAR 20,2012 PRODUCTION RELEASE	JNC	JLAB

DESIGN REFERENCE | NEXT ASSEMBLY
DRFT: CASTIGLIONE DATE: MAR 20,2012
CHKD DATE APPR: H.MATUSOKA DATE: MAR 29,2012
DIVISION: Interconnect Solutions | DIVISION CODE: 150
DO NOT SCALE DRAWING | SCALE —
TOLERANCES EXCEPT AS NOTED: INCHES .0 ± .00 ± .000 ± .0000 ±; MILLIMETERS 0 ± .0 ± .3 .00 ± .13 .000 ±
THIRD ANGLE PROJECTION
INTERPRET PER ASME Y14.5 - 1994
DIM. SURFACE ROUGHNESS: SURFACES / MARKED ONLY
ANGLES ±

© 3M COPYRIGHT 2012
This document and the information it contains are 3M property and may not be reproduced or further distributed without 3M permission, or used or disclosed other than for 3M authorized purposes. All rights reserved.

3M Center St. Paul, MN 55144

TITLE: INDUSTRIAL RJ45 MODULAR PLUG, FOR CAT 5-e CABLE, IDC, WMT, TS-2515

CAGE NUMBER | SIZE D | DRAWING NO. 78-5100-2515-4 | REV. A
MODEL | DET. LISTS ☐ YES ☒ NO | SHT 1 OF 1

78-5100-2515-4 REV. A