REVISIONS				
SYM	DESCRIPTION	REVISED BY	DATE	APPR

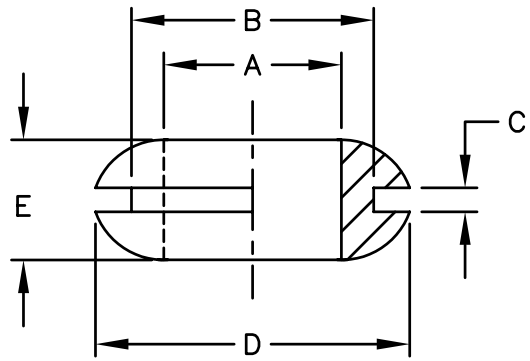

PART #	"A"	"B"	"C"	"D"	"E"
91107	3/8	7/16	3/32	5/8	9/32
91112	49/64	1–3/32	1/16	1–5/8	5/16
91114	1/8	1/4	1/16	11/32	3/16

NOTE:
1. DUROMETER: 60
2. TOLERANCE TO RMA A3

MATERIAL: BLACK BUNA–S (SBR)	FINISH: NA		
DIMENSIONAL TOLERANCES UNLESS OTHERWISE SPECIFIED	TITLE: 91107, 91112, 091114 RUBBER GROMMET CUSTOMER SALES DRAWING		
.XX: --- / .XXX: --- / .XXXX: ---			
FRACTIONS: --- / ANGLES: --- / SCALE: –	DRAWN: T. LORD	DATE: 7/1/11	
HEAT TREAT: CODE 0	CHECKED: T. LORD	DATE: 7/1/11	
PLOT SCALE: 1:1	APPROVED: T. LORD	DATE: 7/1/11	

ABBATRON

Electronic Connectors and Hardware

13680 S. MOSIERTOWN RD
MEADVILLE, PA 16335

SIZE	DRAWING NUMBER	ISSUE
A	91107, 12, 14	-

Downloaded from Arrow.com.