THIS COPY IS PROVIDED ON A RESTRICTED BASIS AND IS NOT TO BE USED IN ANY WAY DETRIMENTAL TO THE INTERESTS OF PANDUIT CORP.

| PANDUIT PART # | WIRE RANGE AWG [ mm² ] | TAB SIZE INCH [ mm ] | HOUSING COLOR | MAX. WIRE INSULATION DIA. | DIMENSIONS in. [ mm ] | | |
|---|---|---|---|---|---|---|---|
| | | | | | L± .03 [ 0,8 ] | W± .01 [ 0,3 ] | H± .02 [ 0,5 ] |
| EDV18-188B | #22-18 [ 0,5-1,0 ] | .187 X .020 [ 4,8 X 0,5 ] | RED | .136 [ 3,45 ] | .79 [ 20,1 ] | .23 [ 5,8 ] | .10 [ 2,5 ] |
| EDV14-188B* | #16-14 [ 1,5-2,5 ] | .187 X .020 [ 4,8 X 0,5 ] | BLUE | .162 [ 4,11 ] | .79 [ 20,1 ] | .23 [ 5,8 ] | .10 [ 2,5 ] |

*UL RECOGNIZED ONLY

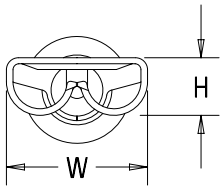


NOTES:

1. UL LISTED AND CSA CERTIFIED FOR:
   A. STRANDED COPPER WIRE ONLY
   B. 221°F (105°C) MAX TEMP RATING
   C. 600V MAX VOLTAGE

2. MATERIAL:
   A. STAMPING: .016" (0.41) THK BRASS, TIN PLATED
   B. HOUSING: VINYL

3. INSTALLATION TOOLS:
   A. UL LISTED AND CSA CERTIFIED: CT-520, CT-1525
   B. UL RECOGNIZED: CT-520, CT-1525

4. WIRE STRIP LENGTH 1/4" $^{+1/32}_{-0}$ [ 6.3mm $^{+0.8}_{-0}$ ]

5. FIRST INSERTION FORCE: 12 LB (53N) MAX
   FIRST WITHDRAWAL FORCE: 12 LB (53N) MAX
   6 LB (27N) MIN

6. SEE WWW.PANDUIT.COM FOR PACKAGE QUANTITIES INDICATED BY PART NUMBER SUFFIX
7. DIMENSIONS IN BRACKETS ARE METRIC EQUIVALENT

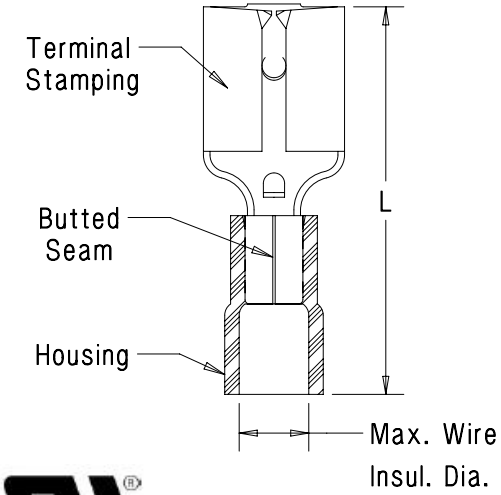


LISTED 20H3 E78522

CERTIFIED LR31212

RECOGNIZED E78522

| REV | DATE | BY | CHK | APR | DESCRIPTION | ECN |
|---|---|---|---|---|---|---|
| 00 | 2/18 | JHNU | TMR | RGB | RELEASED | 00123SH |

TITLE

STRONGHOLD FEMALE DISCONNECT (188 SERIES) VINYL INSULATED, BUTTED SEAM #22-14 AWG

CUSTOMER DRAWING

ITEM REVISION NAME: 00123STL/00

DATASET FILE NAME: 00123STL/00

UNLESS OTHERWISE SPECIFIED, DIMENSIONAL TOLERANCES ARE: IN [ mm ]

.X ± .1 [ 2.54 ] .XXX ± .005 [ .127 ]
.XX ± .01 [ .25 ] ANGLES ± 5 °

THIRD ANGLE PROJECTION

MATERIAL: SEE NOTES

DRAWING NUMBER: SH41554

| DRAWN BY | DATE | CHK | SCALE | SIZE |
|---|---|---|---|---|
| JHNU | 2/18 | TMR | NTS | A |

SHT 1 OF 1

D10100DA/20

Downloaded from Arrow.com.